DS-KD-M
Video Intercom Card Reader Module

Key Feature

- Supports unlock the door via swiping cards
- Supports issuing cards with main unit
- Backlight compensation
- Easy to and extend

Typical Application

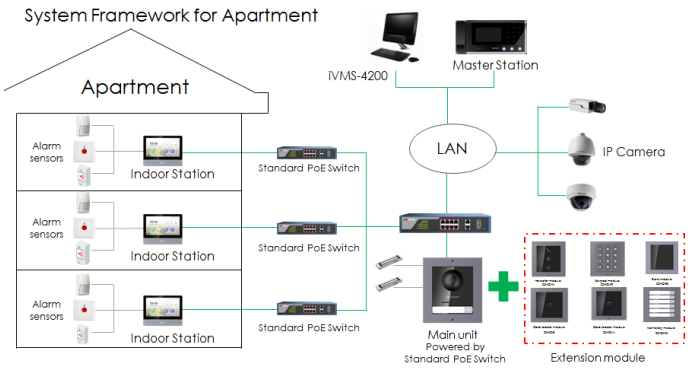

Approval

CE-EMC	a. EN 55032:2015 b. EN 61000-3-2:2014 c. EN 61000-3-3:2013 d. EN 50130-4:2011 +A1:2014
CE-LVD	EN 60950-1:2006 + A11:2009 + A1:2010 + A12:2011 + A2:2013
CE-RED	a. EN 301 489-1 V2.1.1, Final draft EN 301 489-3 V2.1.1 b. EN 300 330 V2.1.1, EN 62311: 2008
CB	IEC 60950-1:2005 (Second Edition) + Am 1:2009 + Am 2:2013
FCC-SDOC	47 CFR Part 15, Subpart B
C-	AS/NZS CISPR 32:2015
TICK(EMC)	
UL	UL 60950-1 & CAN/CSA C22.2 No. 60950-1-07, Information Technology Equipment – Safety – Part 1: General Requirements
IC	ICE-003: Issue 6
ROHS	2011/65/EU
REACH	Regulation (EC) No 1907/2006
WEEE	2012/19/EU

Specification

System parameters	
Processor	Embedded MCU Processor
Internal card reader	Built-in Card Reader
Interfaces	
Module-connecting	2 (1 input, 1 output)
General	
Card type	Mifare card
DIP switch	8
Power input	12 VDC (powered by the other module)
Power output	12 VDC (powered for the other module)
Power consumption	0.8 W
Working temperature	-40° C to +55° C(-40° F to 131° F)
Working humidity	10% to 95%
IP protection level	IP65
Installation	Flush mounting, surface mounting
Dimension	98.5 mm × 100 mm × 33.7 mm (3.87" × 3.95" × 1.33")
Weight	421 g (with packaging) 160 g (without packaging)

Available Model

DS-KD-M (13.56 MHz)

Appearance and Interfaces

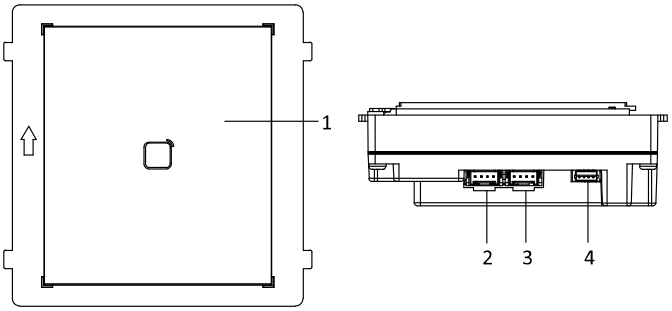

No.	Description
1	Card Reading Area
2	Module-connecting Interface (output)
3	Module-connecting Interface (input)
4	Debug Port

Dimension

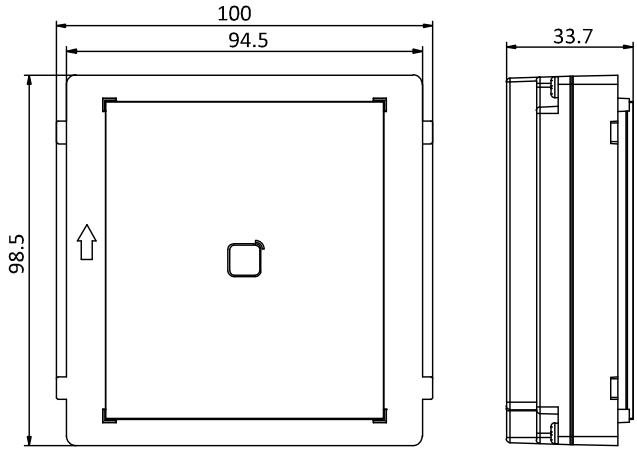

Accessory

Optional	
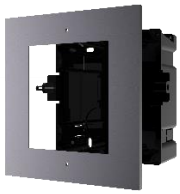	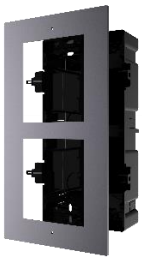
DS-KD-ACF1/Plastic	DS-KD-ACF2/Plastic
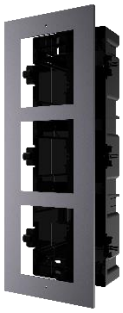	
DS-KD-ACF3/Plastic	DS-KD-ACW1
DS-KD-ACW2	DS-KD-ACW3

BAINISYS
117/8, Changwatthana 10, LakSi, Bangkok 10210
Phone : (66 2) 094-0800
E-mail : sale@bainisys.com
Line Chat : @Bainisys