DS-KD-INFO
Information Module

Key Feature

- Displays information
- Backlight auto switch according to the environmental conditions
- Easy to extend

Typical Application

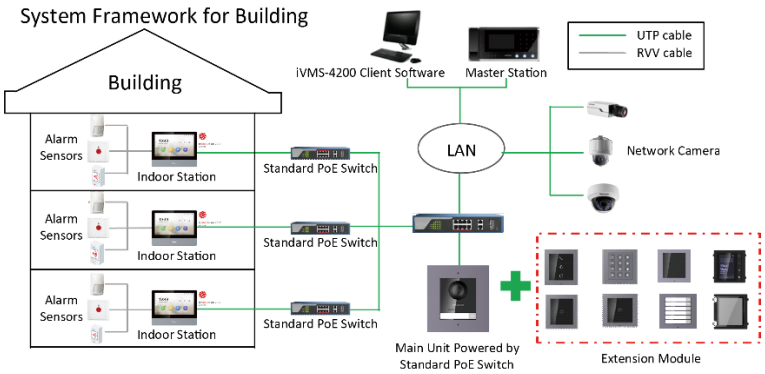

Approval

CE-EMC	a. EN 55032:2015 b. EN 61000-3-2:2014 c. EN 61000-3-3:2013 d. EN 50130-4:2011 +A1:2014
CE-LVD	EN 60950-1:2006 + A11:2009 + A1:2010 + A12:2011 + A2:2013
CB	IEC 60950-1:2005 (Second Edition) + Am 1:2009 + Am 2:2013
C-TICK(EMC)	AS/NZS CISPR 32:2015
ROHS	2011/65/EU
REACH	Regulation (EC) No 1907/2006
WEEE	2012/19/EU

Specification

System parameters	
Operation method	Backlight controlled via client software
Interfaces	
Module-connecting	2 (1 input, 1 output)
Debugging port	1
General	
DIP switch	8
Power supply	12 VDC (powered by the other module)
Power output	12 VDC (powered for the other module)
Power consumption	1.5 W
Working temperature	-20 °C to 60 °C(-4 °F to 140 °F)
Working humidity	10% to 95%
Installation	Flush mounting, surface mounting
Dimension	98.42 mm × 94.4 mm × 33.8 mm (3.87" × 3.72" × 1.34")

Available Model

DS-KD-INFO

Appearance and Interfaces

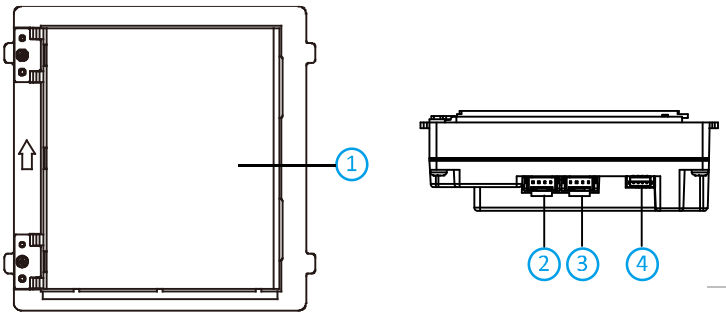

No.	Description
1	Display Area
2	Module-connecting Interface(Output)
3	Module-connecting Interface(Input)
4	Debugging Port

Dimension

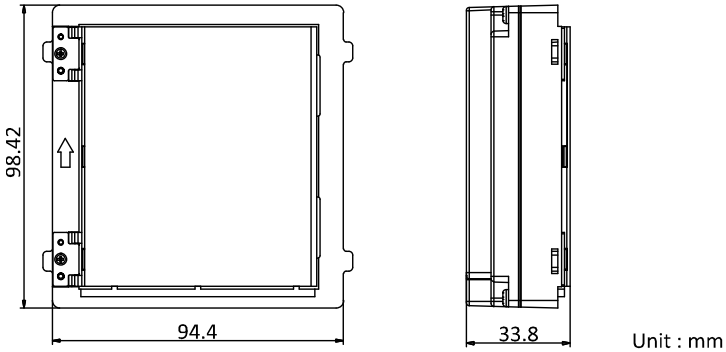

Accessory

Optional	
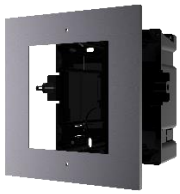	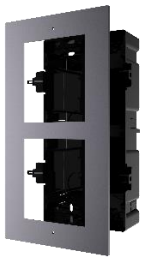
DS-KD-ACF1/Plastic	DS-KD-ACF2/Plastic
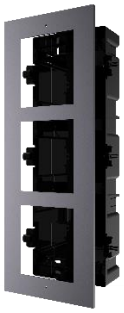	
DS-KD-ACF3/Plastic	DS-KD-ACW1
DS-KD-ACW2	DS-KD-ACW3

BAINISYS
117/8, Changwatthana 10, LakSi, Bangkok 10210
Phone : (66 2) 094-0800
E-mail : sale@bainisys.com
Line Chat : @Bainisys